G-AC063

Technical specifications

Operating mode:
The upper assembly (1) and lower assembly (2) are automatically locked and unlocked by the robot's traverse path onto the tray.

Advantages:
Semi-automatic tool changing system
No external locking and unlocking energy required
Self-locking, secured locking mechanism
Withstands high loads with low dead weight
High repeat accuracy +/- 0.02 mm
Withstands over 100.000 changing cycles
Optional connection of a power coupling **SEK** for electrical ducts
Six integrated pneumatic ducts
Interface according to DIN EN ISO 9409-1

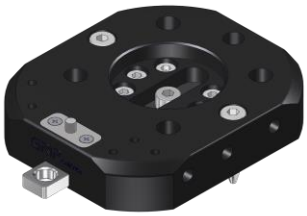

1

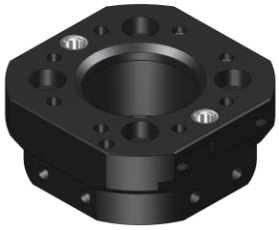

2

Technical specifications		AC063
Basic material		Al, anod.
Length x width x height [mm]		74 x 63 x 44
Pitch circle diameter [mm]		50
Repeat accuracy +/- [mm]		0,02
Tension Fz [N]		1875
Compression -Fz [kN]		65
Torsion Mz [Nm]		69
Bending Mx, My [Nm]		59
Mass [kg]	upper assembly	0,24
	lower assembly	0,15
Recommended load [kg]		15* / 20**
Locking stroke VH [mm]		1,5
Locking force VF [N]		30 - 100
Pneumatic ducts	connection	6 x M5
	max. pressure p [bar]	-1 bis 8

* This guideline applies to the following assumptions:
Acceleration: 10 m/s², gravity distance: 100 mm, double safety

** This guideline applies to the following assumptions:
Acceleration: 5 m/s², gravity distance: 100 mm, double safety

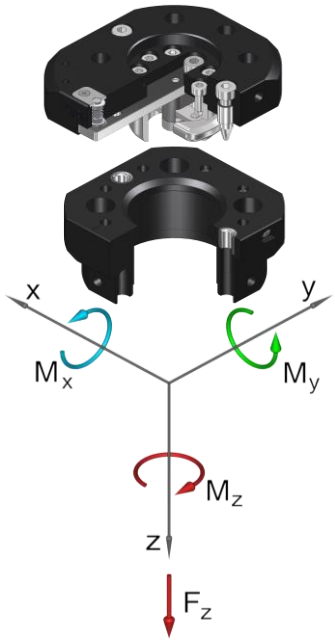

Pos.	Description
1	Upper assembly
2	Slider
3	Tappet
4	Lower assembly
5	Jaw 1
6	Jaw 2 (not visible)
7	Carrier
8	Connecting pin (slider)
9	Connecting pin (jaws)
10	Locking pin
11	Spring cover
12	Spring seat
13	Positioning pin
16	Drill bushing
23	Spring
24	Spring plunger

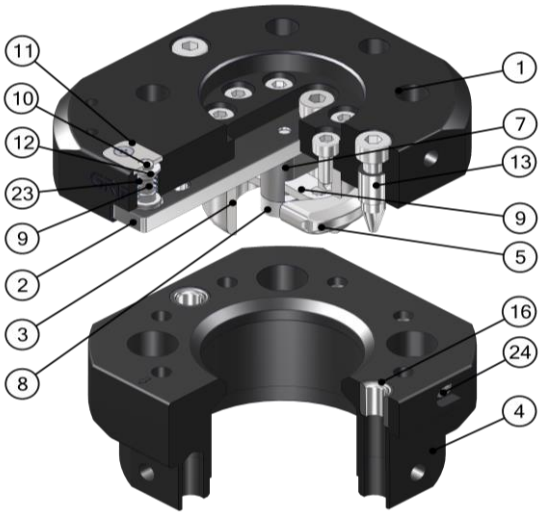

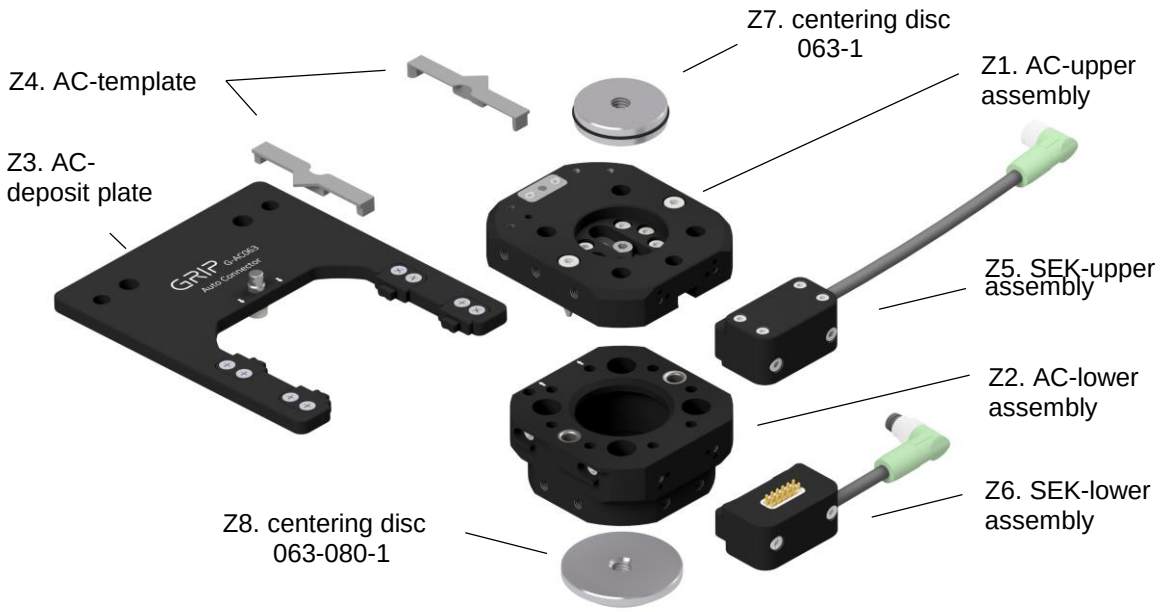

Pos.	Auto Connector Ø63, drilled acc. to ISO…	
Z1.	G-AC063-2OEP	upper assembly, E-Mount, 6 pneumatic ducts, Al, anodized
Z2.	G-AC063-2UEP	lower assembly, E-Mount, 6 pneumatic ducts, Al, anodized
	Accessory Auto Connector Ø63	
Z3.	G-AC063-A1-01	tray for AC063, single, Al, anodized
Z5.	G-SEK100-O-1FE12-300-M8	electric coupling, upper assembly, plug M8, 8-poles, female
Z6.	G-SEK100-U-1FE12-40-M8	electric coupling, lower assembly, plug M8, 8-poles, male
Z7.	G-ZS063-1	centering disc
Z8.	G-ZS063-080-1	centering disc
	Spare and wear parts Auto Connector Ø63	
17.	EG-AC063-DS	gasket kit (8 x O-ring)
23.	EG-AC063-DF01	spring
Z4.	EG-AC063-A1-S1	programming-template 063 (2x)

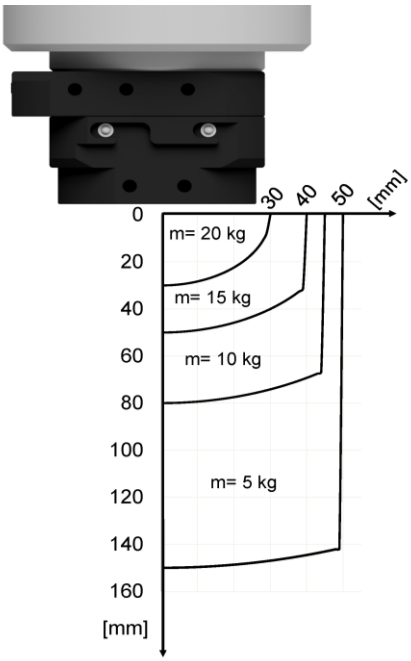

AC063 payload

payload as a function of center of mass distance